SIKAPROOF A+ & SIKA WATERTIGHT CONCRETE SECANT PILE WALL

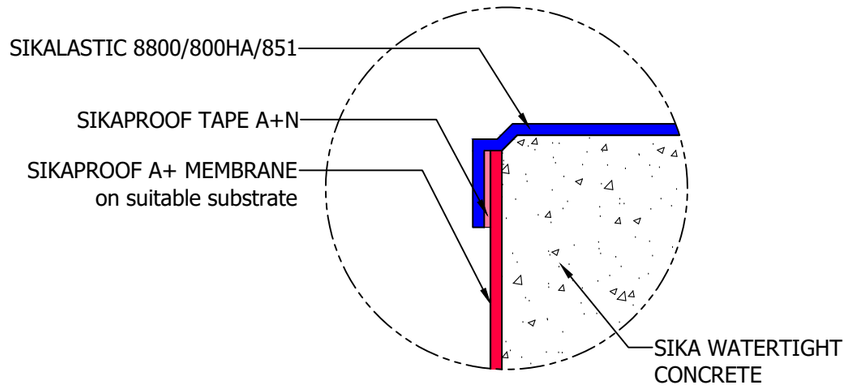

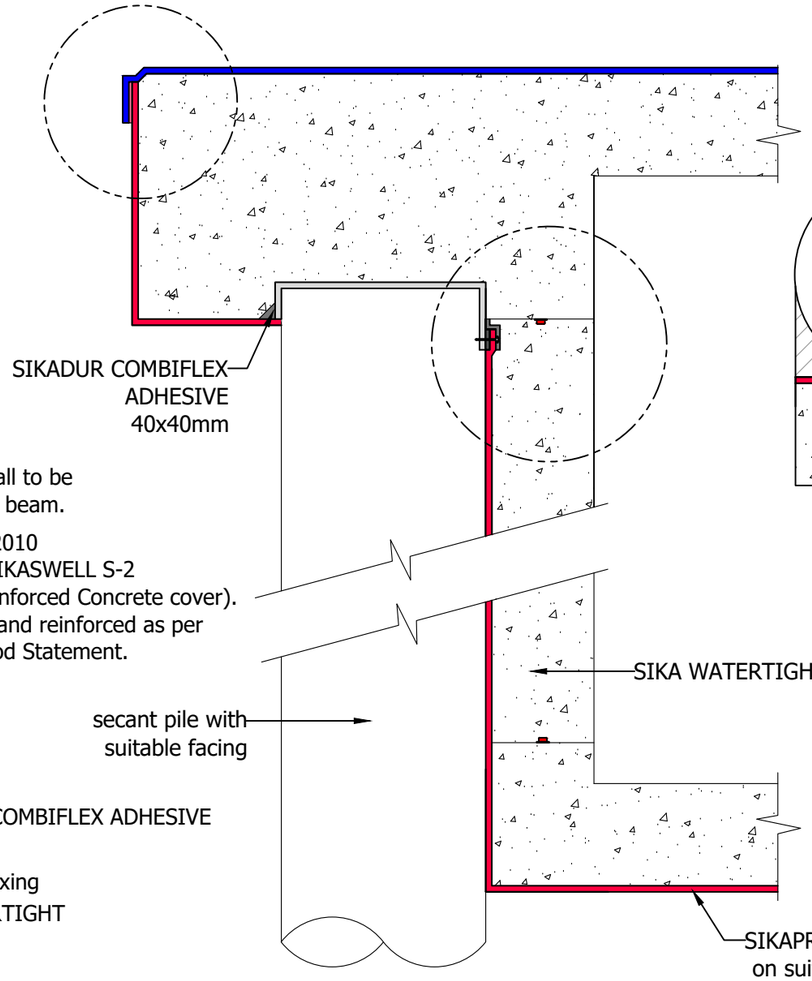

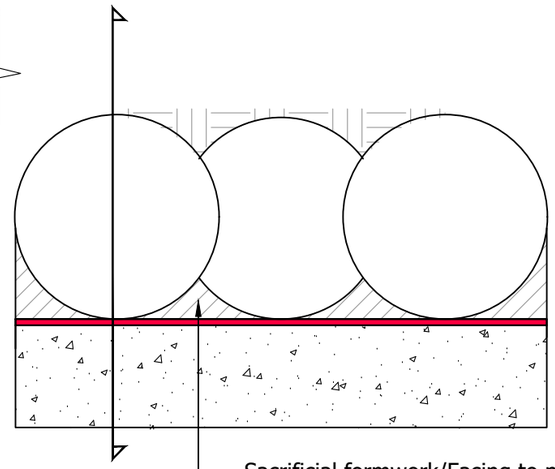

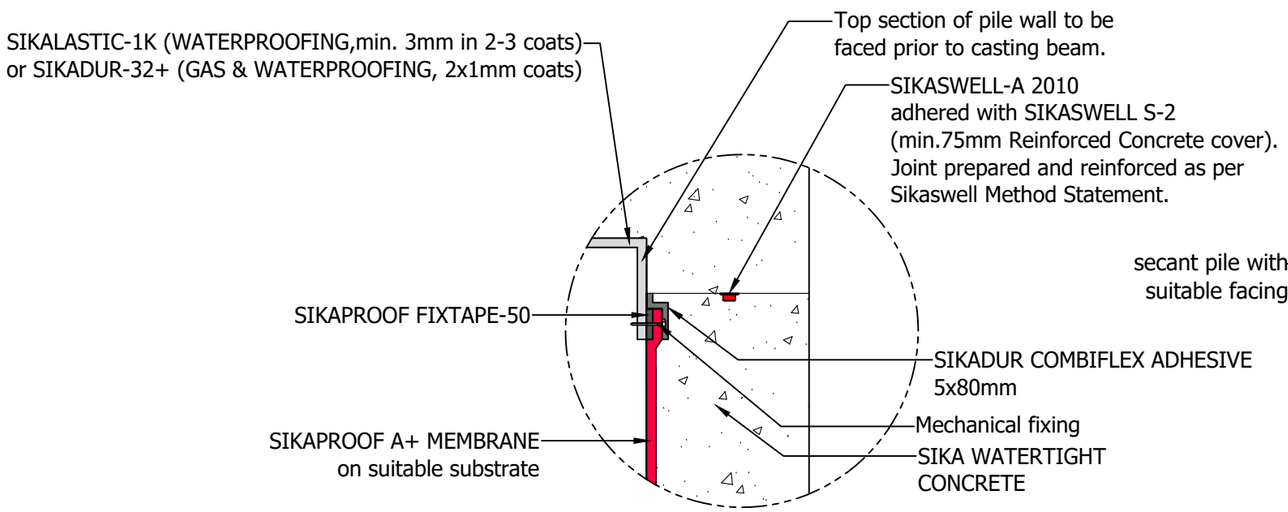

DRAWINGS MUST ALWAYS BE REVIEWED BY A DESIGN SPECIALIST AND IF NECESSARY MODIFIED TO ENSURE SUITABILITY FOR THE SPECIFIC APPLICATION.

The information contained herein and any other advice are given in good faith based on Sika's current knowledge and experience of the products when properly stored, handled and applied under normal conditions in accordance with Sika's recommendations. The information only applies to the application(s) and product(s) expressly referred to herein and is based on laboratory tests which do not replace practical tests. In case of changes in the parameters of the application, such as changes in substrates etc., or in case of a different application, consult Sika's Technical Service prior to using Sika products. The information contained herein does not relieve the user of the products from testing them for the intended application and purpose. All orders are accepted subject to our current terms of sale and delivery. Users must always refer to the most recent issue of the local Product Data Sheet for the product concerned, copies of which will be supplied on request.

ALL DETAIL DRAWINGS ARE FOR UK USE ONLY

DO NOT SCALE FROM DRAWING

THIS DRAWING IS THE CONFIDENTIAL PROPERTY OF SIKA LIMITED AND MUST NOT BE REPRODUCED EITHER WHOLLY OR PARTLY. ALL RIGHTS IN RESPECT OF PATENTS, DESIGN AND COPYRIGHTS ARE RESERVED. SIKA LTD. WWW.SIKA.CO.UK

Drawn by	Checked by	Approved by	Date

Description: **SIKAPROOF A+ & SIKA WATERTIGHT CONCRETE SECANT PILE WALL**

Drawing No.	Issue	Sheet
SP+W14	A	1 / 1